REVISIONS			
LTR	DESCRIPTION	DATE	APPROVED
1	ENGINEERING REVISION 11/10/20, K. PHAN	11/10/20	G. S.

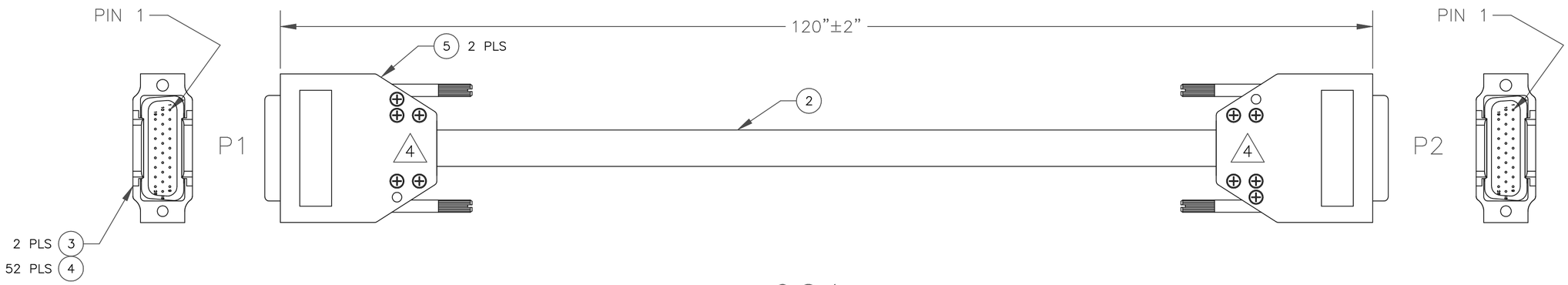

-901

1861330

QTY 901	ITEM NO.	PART NO.	DESCRIPTION
0.6ft	6	3720067-002	COPPER FOIL TAPE, 1/2" W/CONDUCTIVE ADHESIVE (3M# 80-0180-0265-1)
2	5	2125077-301	HOOD, DB-15 METAL W/THUMBSCREWS RoHS (DIGI-KEY# 609-1454-ND)
52	4	2120065-202	CONTACT, 22-28 AWG HIGH DENSITY MALE RoHS (TYCO# 1658670-2)
2	3	2120065-012	CONNECTOR, DB-26 MALE HIGH DENSITY RoHS (TYCO# 1658671-1)
10ft	2	6020198-003	CABLE, 28 AWG 36 COND. 18 TW/PRS SHIELDED RoHS (DIGI-KEY# MB36T-100-ND)
X	1	THIS DWG	CABLE ASSY., RCIM IV BREAKOUT.

NOTES:

1. WORKMANSHIP TO BE PER IPC 620.
2. MARK ASSY NO. 1861330, APPLICABLE DASH NO. AND REVISION PER CONCURRENT SPEC 9004-5, BLACK.
3. MANUFACTURING TO IDENTIFY EACH END OF CABLE WITH REFERENCE DESIGNATION.
4. WRAP ITEM# 6, 2" LONG AROUND CABLE SHIELD BEFORE INSTALLING HOOD.

DASH NO. THIS DWG.	NEXT ASSY	USED ON
.	.	.
.	.	.
.	.	.
.	.	.

APPLICATION

ALL DIMENSION ARE IN INCHES UNLESS OTHERWISE SPECIFIED

TOLERANCE
.X ± -
.XX ± .02
.XXX ± .010
ANGLE ± 1/2°
HOLES ± .003
SURFACE ROUGHNESS -

DEV NO.

MATERIAL
.
.
.

FINISH
.
.
.

concurrent REAL-TIME

DRAFTER	K. PHAN	11/10/20
CHECKER	.	.
MECH. ENG.	.	.
ELEC. ENG.	.	.
PROJ. ENG.	G. SKANTAR	11/10/20

INFORMATION DISCLOSED HERE IS THE PROPERTY OF THE CONCURRENT REAL-TIME AND SHALL NOT BE DISCLOSED OR USED FOR ANY OTHER PURPOSES EXCEPT AS SPECIFIED BY CONTRACT BETWEEN THE RECIPIENT AND THE CONCURRENT REAL-TIME. DUPLICATION OF ANY PORTION OF THIS DATA SHALL INCLUDE THIS LEGEND.

CABLE ASSY., RCIM IV BREAKOUT

SIZE	CODE IDENT NO.	DRAWING NO.	REV
C	7UG01	1861330	1

SCALE: NONE | CONT. ON SHEET 2 | SHEET 1 OF 2

REVISIONS			
	DESCRIPTION	DATE	APPROVED

WIRE CHART

WIRE NO.	WIRE ITEM NO.	COLOR	FROM	TERM ITEM NO.	TO	TERM ITEM NO.	SIGNAL (REF)
1	2	WHITE/TAN	P1–1	3/4	P2–1	3/4	EXT_INOUT0
2		TAN/WHITE	P1–10*	3/4	P2–10*	3/4	GND
3		BROWN/TAN					
4		TAN/BROWN	P1–19	3/4	P2–19	3/4	EXT_RXD
5		WHITE/BROWN	P1–2	3/4	P2–2	3/4	EXT_INOUT1
6		BROWN/WHITE	P1–11*	3/4	P2–11*	3/4	GND
7		PINK/TAN					
8		TAN/PINK	P1–20	3/4	P2–20	3/4	EXT_TXD
9		WHITE/PINK	P1–3	3/4	P2–3	3/4	EXT_INOUT2
10		PINK/WHITE	P1–12*	3/4	P2–12*	3/4	GND
11		ORANGE/TAN					
12		TAN/ORANGE	P1–21	3/4	P2–21	3/4	EXT_AMIN
13		WHITE/ORANGE	P1–4	3/4	P2–4	3/4	EXT_INOUT3
14		ORANGE/WHITE	P1–13*	3/4	P2–13*	3/4	GND
15		YELLOW/TAN					
16		TAN/YELLOW	P1–22	3/4	P2–22	3/4	EXT_AMOUT
17		WHITE/YELLOW	P1–5	3/4	P2–5	3/4	EXT_INOUT4
18		YELLOW/WHITE	P1–14*	3/4	P2–14*	3/4	GND
19		GREEN/TAN					
20		TAN/GREEN	P1–23	3/4	P2–23	3/4	·
21		WHITE/GREEN	P1–6	3/4	P2–6	3/4	EXT_INOUT5
22		GREEN/WHITE	P1–15*	3/4	P2–15*	3/4	GND
23		BLUE/TAN					
24		TAN/BLUE	P1–24	3/4	P2–24	3/4	EXT_INOUT11
25		WHITE/BLUE	P1–7	3/4	P2–7	3/4	EXT_INOUT6
26		BLUE/WHITE	P1–16*	3/4	P2–14	3/4	GND
27		VIOLET/TAN					
28		TAN/VIOLET	P1–25	3/4	P2–25	3/4	EXT_INOUT10
29		WHITE/VIOLET	P1–8	3/4	P2–8	3/4	EXT_INOUT7
30		VIOLET/WHITE	P1–17*	3/4	P2–17*	3/4	GND
31		GRAY/TAN					
32		TAN/GRAY	P1–26	3/4	P2–26	3/4	EXT_INOUT9
33		WHITE/GRAY	P1–9	3/4	P2–9	3/4	EXT_INOUT8
34		GRAY/WHITE	P1–18	3/4	P2–18	3/4	GND
35		BROWN/PINK	N/C	·	N/C	·	·
36		PINK/BROWN	N/C	·	N/C	·	·

P1/P2

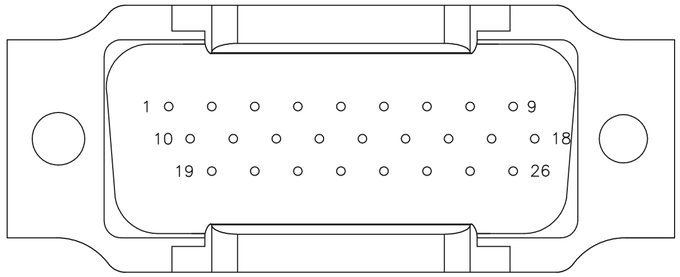

FRONT VIEW

P1/P2

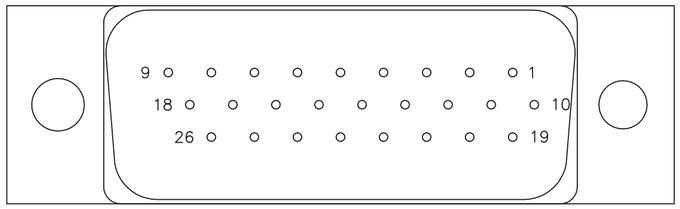

WIRES VIEW

1861330

INFORMATION DISCLOSED HERE IS THE PROPERTY OF THE CONCURRENT REAL–TIME AND SHALL NOT BE DISCLOSED OR USED FOR ANY OTHER PURPOSES EXCEPT AS SPECIFIED BY CONTRACT BETWEEN THE RECIPIENT AND THE CONCURRENT REAL–TIME. DUPLICATION OF ANY PORTION OF THIS DATA SHALL INCLUDE THIS LEGEND.

concurrent REAL-TIME

SIZE	CODE IDENT NO.	DRAWING NO.	REV
C	7UG01	1861330	1

SCALE: NONE | CONT. ON SHEET – | SHEET 2 OF 2